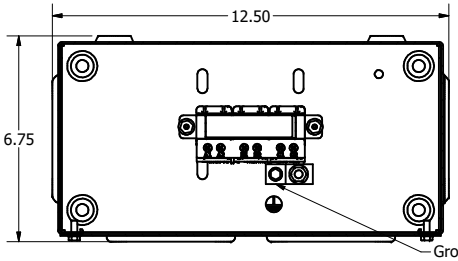

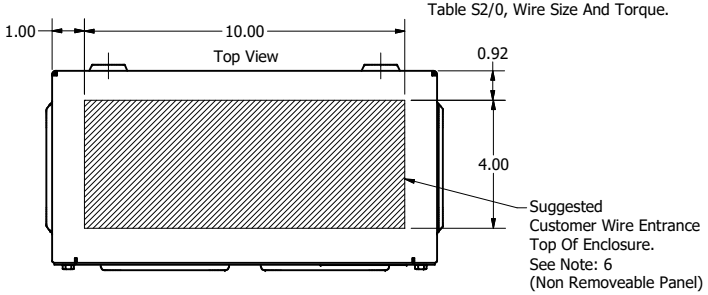

480 Rated Voltage, 690 Max Voltage, High Z, Impedance.						
Part Number	Horsepower (HP)	Motor Amps (A)	Maximum Amps (A)	Inductance (uH) +/-10%	Weight (LBS)	Losses (W)
KDRMA1H1E01	1/4	0.7	0.75	52500	11.7	7.9
KDRMA2H1E01	1/3	0.8	1.0	45900	11.9	9.2
KDRMA3H1E01	1/2	1.1	1.5	33400	11.7	14.3
KDRMA4H1E01	3/4	1.6	2.0	23000	11.8	19.3
KDRMA5H1E01	1	2.1	2.3	17500	11.8	26.7
KDRMA6H1E01	1 1/2	3.0	3.3	12300	12.0	30.0

208/ 240 Rated Voltage, 690 Max Voltage, High Z, Impedance.						
Part Number	Horsepower (HP)	Motor Amps (A)	Maximum Amps (A)	Inductance (uH) +/-10%	Weight (LBS)	Losses (W)
KDRMA21H1E01	1/4	1.4	2.0	13800	11.8	8
KDRMA22H1E01	1/2	2.4	3.0	7400	11.8	24.9
KDRMA23H1E01	3/4	3.5	4.0	4600	11.8	16.1
KDRMA24H1E01	1	4.6	5.0	4000	11.6	28.7
KDRMA25H1E01	1 1/2	6.6	7.0	2780	11.9	28.6
KDRMA26H1E01	2	7.5	9.0	2290	11.9	32.5

600 Rated Voltage, 690 Max Voltage, High Z, Impedance.						
Part Number	Horsepower (HP)	Motor Amps (A)	Maximum Amps (A)	Inductance (uH) +/-10%	Weight (LBS)	Losses (W)
KDRMA41H1E01	1/4	0.5	0.6	91900	11.7	5.9
KDRMA42H1E01	1/3	0.7	0.75	65600	11.6	9.1
KDRMA43H1E01	1/2	0.9	1.1	51000	11.9	12.9
KDRMA44H1E01	3/4	1.3	1.6	35300	12.0	14.6
KDRMA45H1E01	1	1.7	2.1	27000	11.9	27.0

480 Rated Voltage, 690 Max Voltage, Low Z, Impedance.						
Part Number	Horsepower (HP)	Motor Amps (A)	Maximum Amps (A)	Inductance (uH) +/-10%	Weight (LBS)	Losses (W)
KDRMA1L1E01	1/4	0.7	0.8	31500	11.7	5.0
KDRMA2L1E01	1/3	0.8	1.0	27600	11.7	6.2
KDRMA3L1E01	1/2	1.1	1.6	20000	11.7	9.7
KDRMA4L1E01	3/4	1.6	1.9	13800	11.7	12.1
KDRMA5L1E01	1	2.1	2.3	10500	11.6	25.2
KDRMA6L1E01	1 1/2	3.0	3.3	7400	11.8	26.4
KDRMA7L1E01	2	3.4	4.2	6500	11.8	23.5
KDRMA8L1E01	3	4.8	5.0	4600	11.8	30.6

208/ 240 Rated Voltage, 690 Max Voltage, Low Z, Impedance.						
Part Number	Horsepower (HP)	Motor Amps (A)	Maximum Amps (A)	Inductance (uH) +/-10%	Weight (LBS)	Losses (W)
KDRMA21L1E01	1/4	1.4	2.0	7400	11.8	4.6
KDRMA22L1E01	1/2	2.4	3.0	4600	11.8	6.8
KDRMA23L1E01	3/4	3.5	4.2	3150	11.6	12.9
KDRMA24L1E01	1	4.6	5.5	2400	11.6	19.2
KDRMA25L1E01	1 1/2	6.6	7.0	1670	11.6	23.3
KDRMA27L1E01	2	7.5	9.0	1370	11.7	27

600 Rated Voltage, 690 Max Voltage, Low Z, Impedance.						
Part Number	Horsepower (HP)	Motor Amps (A)	Maximum Amps (A)	Inductance (uH) +/-10%	Weight (LBS)	Losses (W)
KDRMA41L1E01	1/4	0.5	0.6	55100	11.6	3.9
KDRMA42L1E01	1/3	0.7	0.8	39400	11.6	6.1
KDRMA43L1E01	1/2	0.9	1.1	30600	11.5	8.5
KDRMA44L1E01	3/4	1.3	1.5	21200	11.7	10.9
KDRMA45L1E01	1	1.7	2.1	16200	11.7	16.2
KDRMA46L1E01	1 1/2	2.4	2.5	11500	11.8	17.2
KDRMA47L1E01	2	2.7	3.2	10200	11.9	20.5

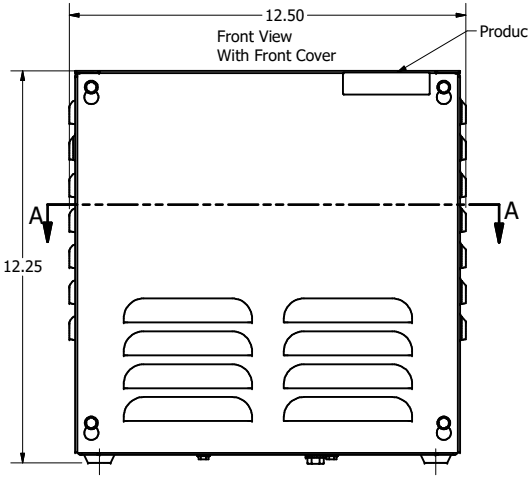

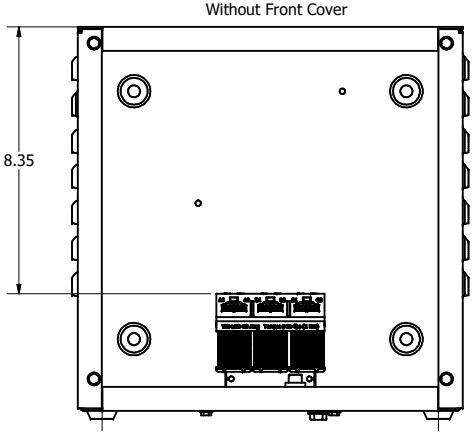

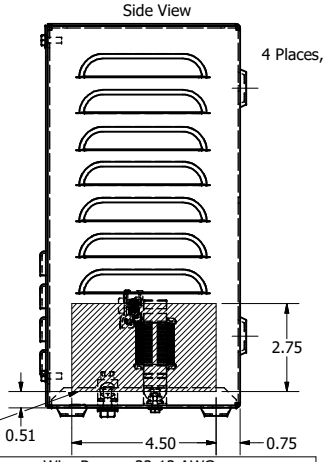

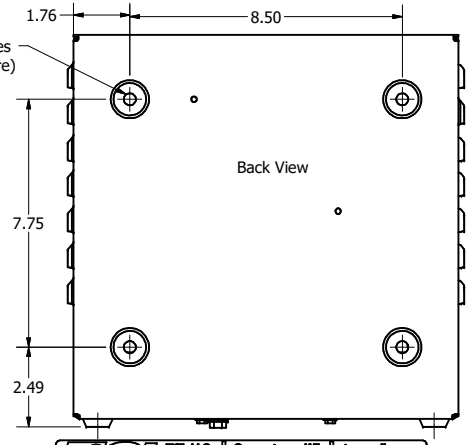

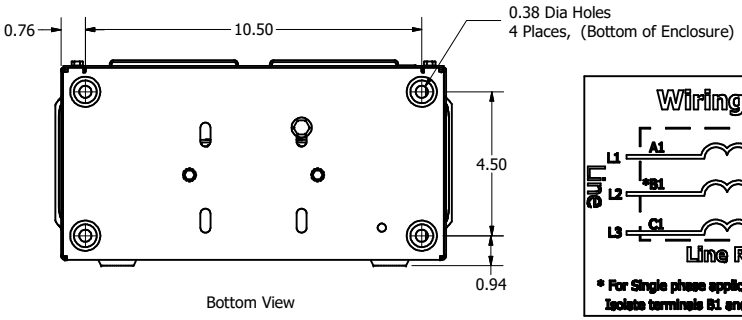

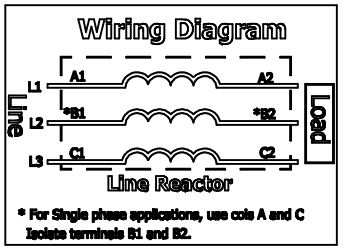

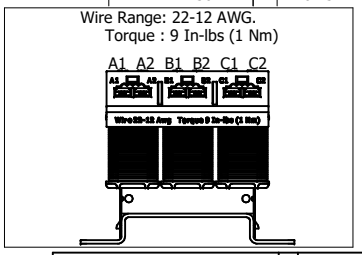

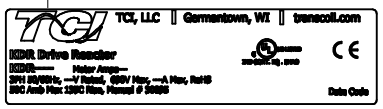

Notes:
1. UL file number: cULus Listed File E116124.
2. KDR Drive Reactors Comply With The Thermal and Altitude Standards Set Forth by NEMA ST20-1992.
3. KDR IOM Manual Part Number 30895
4. NEC Current For 208/240 Volts, Horsepower Based On 208 Volts.
5. Material(s) Shall be RoHS Compliant
6. User To Punch Own Holes For Wire Entry.
7. Customer Is Responsible For Installation To Meet All National And Local Electrical Codes.

THE INFORMATION AND DESIGNS CONTAINED IN THIS DRAWING ARE CONFIDENTIAL AND THE PROPRIETARY PROPERTY OF ALLIED MOTION TECHNOLOGIES INC. AND ITS SUBSIDIARIES. NEITHER THIS DESIGN NOR ANY INFORMATION CONTAINED IN THIS DRAWING MAY BE REPRODUCED OR DISCLOSED TO OTHERS WITHOUT THE EXPRESS WRITTEN CONSENT OF ALLIED MOTION TECHNOLOGIES INC. AND ITS SUBSIDIARIES.

NO	REVISION	DATE	BY
E	6688, Various MAX AMP UPDATES	5/31/2024	DSW
D	KDRMA24LE01-25LE01, at Rev D	11/4/2021	DSW
D	5766,MA24LE01-25LE01, Max A Corrected	11/4/2021	DSW
C	5690, KDRMA46LE01 Correct Max A	8/12/2021	DSW
C	KDRMA46L1E01 At Rev C	8/12/2021	DSW
B	Reactors at Rev B	8/11/2021	DSW

TOLERANCES (EXCEPT AS NOTED)
DECIMAL .XX ± .25 .XXX ± .10
FRACTIONAL ± 1/16
ANGULAR ± 1°

TCI An Allied Motion Company
W132N10611 Grant Drive
Germantown, WI 53022
© 2021 TCI, LLC

KDR MA Frame, Terminal Block
Enclosed Type 1

DRN. BY: DSW | DATE: 10/20/2017 | 107122DG
SCALE: 1/3 | APRVD: | SIZE: C | SHT 1 OF 1